Submittal Data Sheet

Wilo BLZ – Block Line Stainless Steel Closed Coupling Pump

BLZ 1x1.25x6.19B THD (Threaded)

Project:	
Engineer:	
Contractor:	
Submitted By:	Date:
Approved By:	Date:

Tag #	Model #	Flow (USGPM)	Head (Feet)	HP	Enclosure TEFC/ODP	Frame	Cycle	Phase	Voltage	RPM
							60Hz			**3450**

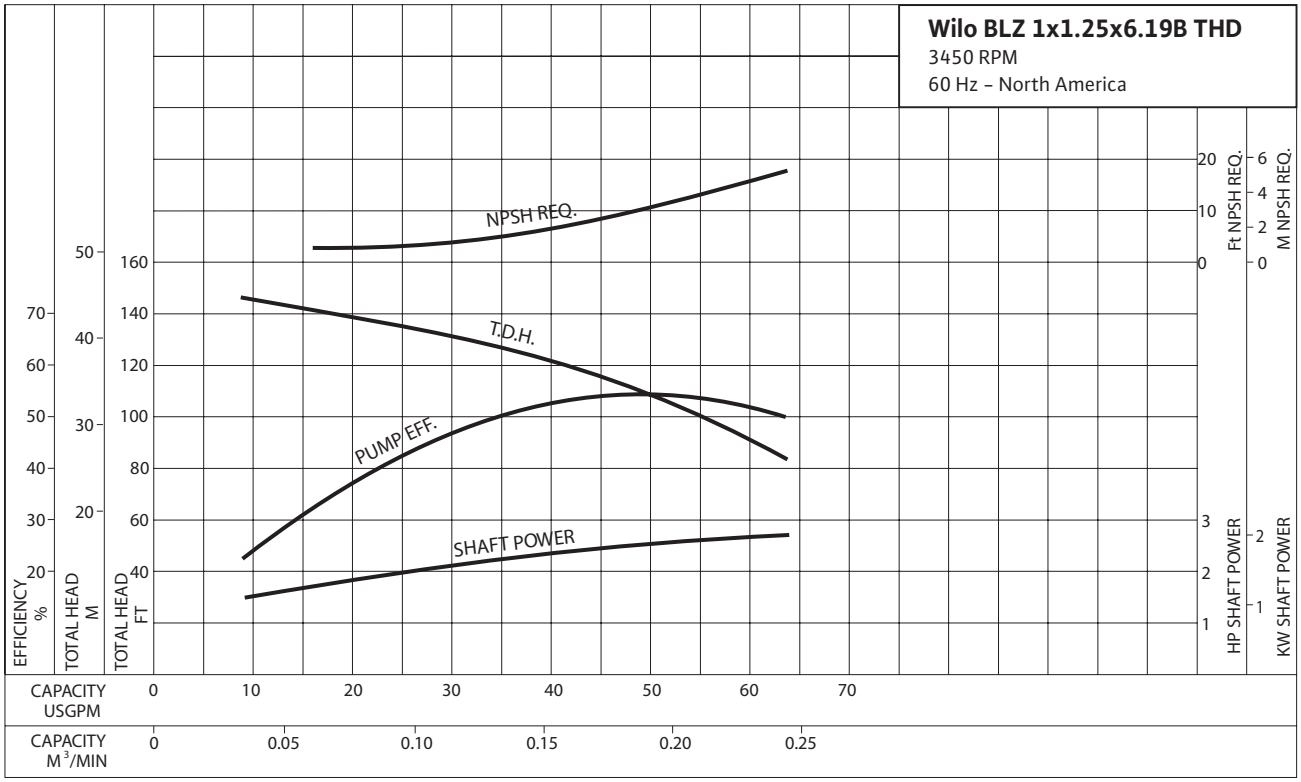

Technical Data

Type	NEMA 56J Frame
Speed	60 Hz, 3450 RPM (2 poles)
Voltage	1~ 115/230V, 3~ 208–230/460V
Type of Liquid	Water
Temperature	212°F (100°C)
Max. Working Pressure	125 PSI (9 Bar)
Certification	NSF/ANSI 61 Annex G listed

Materials of Construction

Casing	304L Stainless Steel
Impeller (closed type)	304L Stainless Steel
Shaft	Stainless Steel
Bracket	Aluminum
Shaft Seal	Mechanical Seal – Type 21

Applications

Heating and Cooling	Water Supply Systems
Sprinkler/Flow Irrigation	Pressure Boosting
Municipal Water	Heat Exchanger

Approval Stamp

Submittal Data Sheet

Wilo BLZ – Blocked Lined Stainless Steel Closed Coupling Pump

Dimensions & Weights

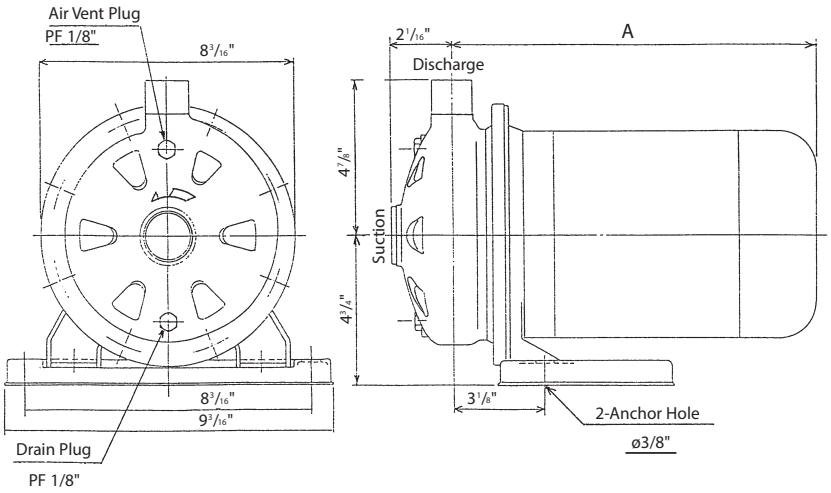

BLZ 1x1.25x6.19B THD – Pump Data						
Pump Size – NPT (Inches)		**Dimension (Inches)**	**Unit Weight (lbs)**			
Suction	Discharge	A	Single Phase		Three Phase	
			ODP	TEFC	ODP	TEFC
1¼	1	14 7/16 Max.	59	66	51	60

Email Print Save

WILO USA LLC

Tel: (888) 945-6872 Web: www.wilo-usa.com
Fax: (888) 945-6873 Email: info@wilo-usa.com

WILO Canada Inc.

Tel: (866) 945-6236 Web: www.wilo-canada.com
Fax: (403) 277-9456 Email: info@wilo-canada.com

WILO Mexico

Tel: +52 55 5586 3209 Web: www.wilo-mexico.com.mx
Fax: +52 1 55 5413 4165 Email: info@wilo.com.mx