REVISIONS					
REV.	EN NO.	DATE	DESCRIPTION	DRAWN BY	APPROVED

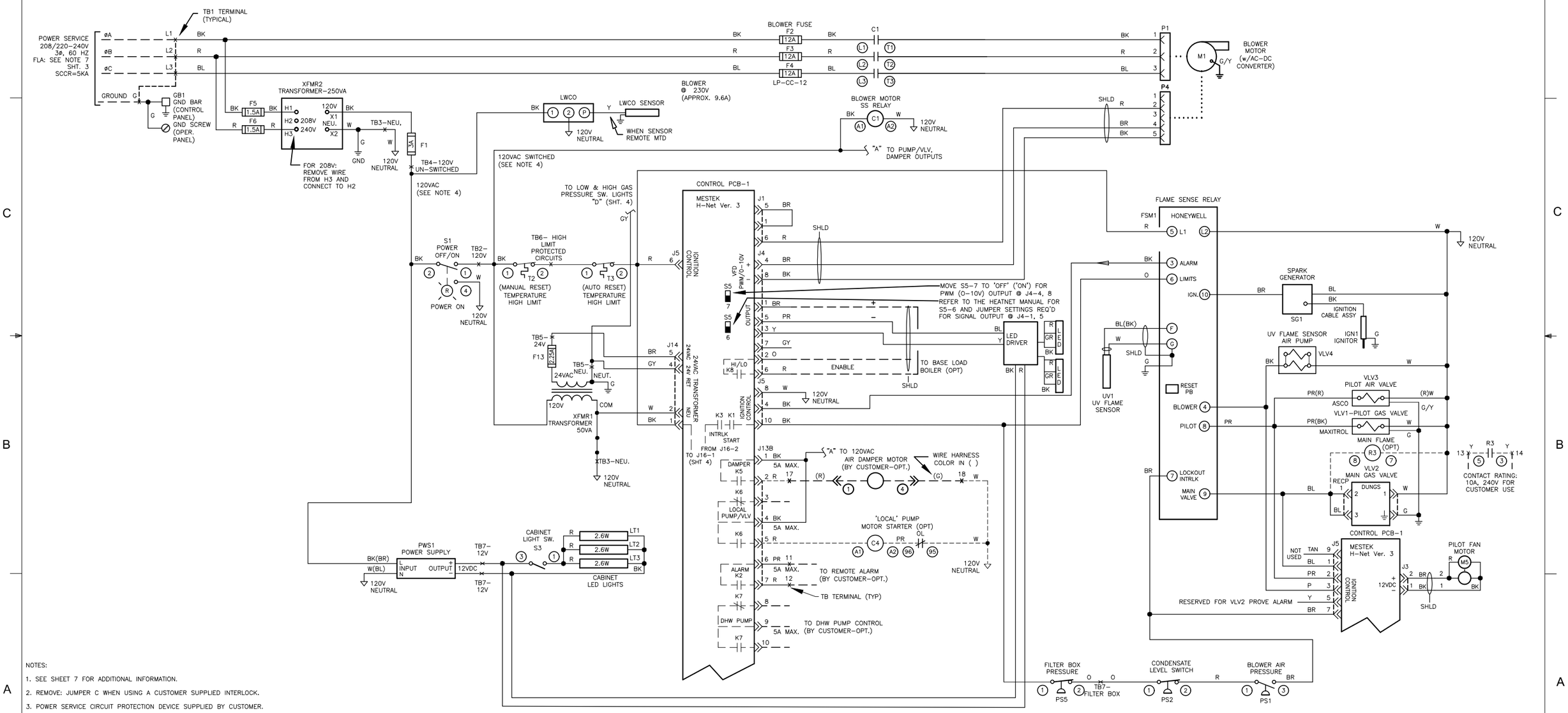

NOTES:

1. SEE SHEET 7 FOR ADDITIONAL INFORMATION.
2. REMOVE: JUMPER C WHEN USING A CUSTOMER SUPPLIED INTERLOCK.
3. POWER SERVICE CIRCUIT PROTECTION DEVICE SUPPLIED BY CUSTOMER.
4. THE 120VAC POWER CONTROL CIRCUIT MUST NOT BE USED AS A POWER SOURCE FOR FIELD CONTROL DEVICES.
5. FOR MULTIPLE BOILERS OPERATING WITH A SYSTEM AIR DAMPER WHEN IN A MASTER/MEMBER CONFIGURATION: ADD A JUMPER FROM TERMINAL TB-16 ON THE MASTER BOILER TO TERMINAL TB-16 ON ALL MEMBER BOILERS.
6, 7 ---
8. HEATNET ONLINE, STAGE 2, 3, 4 AND SYSTEM PUMP 2 OUTPUTS ARE NOT AVAILABLE WITH THE H-NET 'LITE' CONTROL PCB.
9. SEE SHEET 14 FOR TRANSFORMER AND FUSE SIZING CHART.

LADDER DIAGRAM
208V/220V-240V 3ϕ, 60HZ

DIVISION	PRODUCT	DRAWN BY	DATE	DRAWING DESCRIPTION			
RBI	CK3000	MAC	10/15/15	WIRING DIAGRAM			
THE PRINT AND ALL INFORMATION THEREON IS PROPERTY OF THE RBI DIVISION OF MESTEK, INC. NEITHER THE PRINT NOR THE INFORMATION THEREON MAY BE REPRODUCED OR USED IN ANY MANNER WHATSOEVER OR DIVULGED TO ANY OTHER PERSON UNLESS SPECIFICALLY AUTHORIZED BY MESTEK, INC.		CHECKED BY JAS	DATE 10/15/15	DRAWING NUMBER CK3000N-0-R-8-S-0-C-A-00-E2			
		APPROVED BY	DATE	SHEET 1 OF 7	SHEET SIZE B	SCALE N/A	REVISION N/A

REVISIONS					
REV.	EN NO.	DATE	DESCRIPTION	DRAWN BY	APPROVED

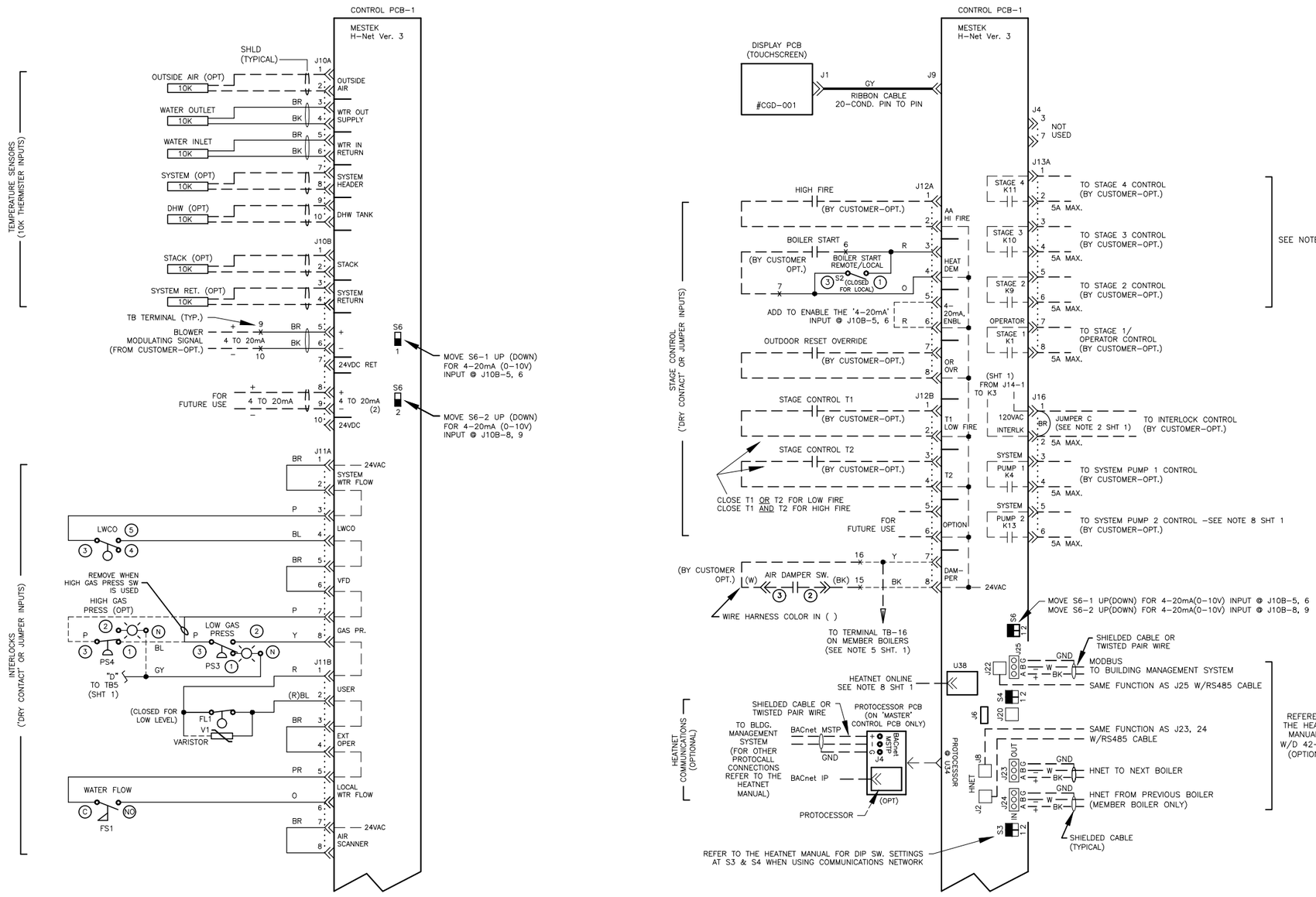

NOTES:

1. SEE SHEET 1 AND 7 FOR ADDITIONAL INFORMATION.

LADDER DIAGRAM
208V/220V–240V 3ϕ, 60HZ

DIVISION	PRODUCT	DRAWN BY	DATE	DRAWING DESCRIPTION			
RBI	CK3000	MAC	10-15-15	WIRING DIAGRAM			
THE PRINT AND ALL INFORMATION THEREON IS PROPERTY OF THE RBI DIVISION OF MESTEK, INC. NEITHER THE PRINT NOR THE INFORMATION THEREON MAY BE REPRODUCED OR USED IN ANY MANNER WHATSOEVER OR DIVULGED TO ANY OTHER PERSON UNLESS SPECIFICALLY AUTHORIZED BY MESTEK, INC.		CHECKED BY JAS	DATE 10-15-15	DRAWING NUMBER CK3000N-0-R-8-S-0-C-A-00-E2			
		APPROVED BY	DATE	SHEET 2 OF 7	SHEET SIZE B	SCALE N/A	REVISION N/A

REVISIONS					
REV.	EN NO.	DATE	DESCRIPTION	DRAWN BY	APPROVED

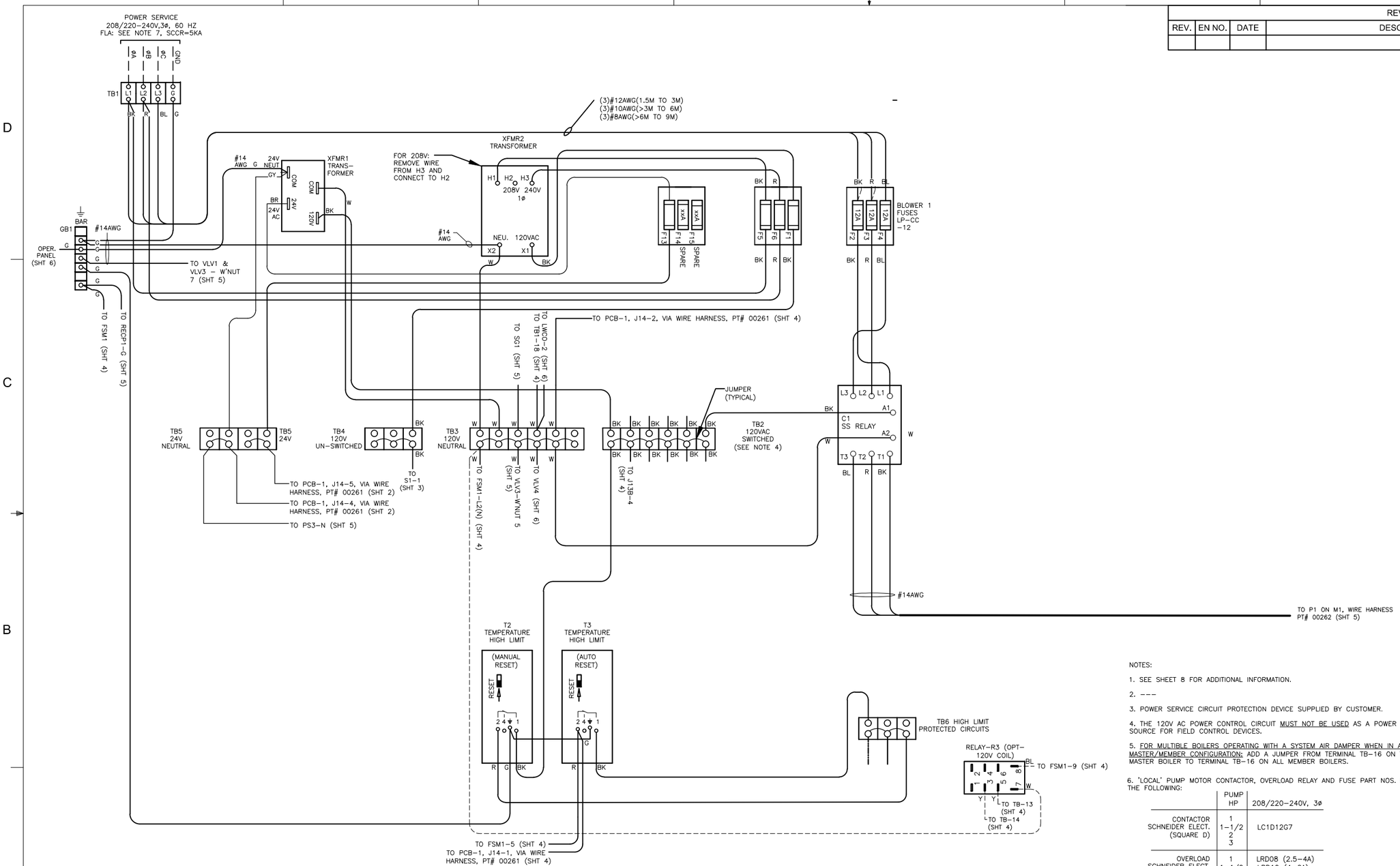

NOTES:

1. SEE SHEET 8 FOR ADDITIONAL INFORMATION.

2. ---

3. POWER SERVICE CIRCUIT PROTECTION DEVICE SUPPLIED BY CUSTOMER.

4. THE 120V AC POWER CONTROL CIRCUIT MUST NOT BE USED AS A POWER SOURCE FOR FIELD CONTROL DEVICES.

5. FOR MULTIBLE BOILERS OPERATING WITH A SYSTEM AIR DAMPER WHEN IN A MASTER/MEMBER CONFIGURATION: ADD A JUMPER FROM TERMINAL TB-16 ON THE MASTER BOILER TO TERMINAL TB-16 ON ALL MEMBER BOILERS.

6. 'LOCAL' PUMP MOTOR CONTACTOR, OVERLOAD RELAY AND FUSE PART NOS. PER THE FOLLOWING:

	PUMP HP	208/220-240V, 3ø
CONTACTOR SCHNEIDER ELECT. (SQUARE D)	1 1-1/2 2 3	LC1D12G7
OVERLOAD SCHNEIDER ELECT. (SQUARE D)	1 1-1/2 2 3	LRD08 (2.5-4A) LRD10 (4-6A) LRD12 (5.5-8A) LRD16 (9-13A)
PUMP FUSE BUSSMANN OR EQUIVALENT	1 1-1/2 2 3	LP-CC-5 LP-CC-8 LP-CC-10 LP-CC-15

PART NOS. ARE BASED ON THE FLA RATINGS FOR 3ø AC INDUCTION MOTORS AS LISTED IN ARTICLE 430 OF THE NATIONAL ELECTRICAL CODE.

7. POWER SERVICE AS FOLLOWS:

FLA (NOT INCLUDING 'LOCAL' PUMP MOTOR): @ 230V, 3ø

MODEL(S)	FLA
CK1500	10.3A

ADD LOCAL PUMP MOTOR FLA BELOW TO SYSTEM FLA ABOVE TO GET TOTAL FLA WHEN USING LOCAL PUMP MOTOR.

PUMP HP	230V, 3ø
1	4.2A
1-1/2	6.0A
2	6.8A
3	9.6A

TOTAL FLA DETERMINED BY USING THE FLA RATINGS FOR 3ø AC INDUCTION MOTORS AS LISTED IN ARTICLE 430 OF THE NATIONAL ELECTRICAL CODE.

8. SEE SHT 7 FOR TRANSFORMER AND FUSE SIZING CHART.

CONNECTION DIAGRAM
208V/220V-240V 3ϕ. 60HZ, 4 WIRE

DIVISION	PRODUCT	DRAWN BY	DATE	DRAWING DESCRIPTION			
RBI	CK3000	MAC	10-15-15	WIRING DIAGRAM			
THE PRINT AND ALL INFORMATION THEREON IS PROPERTY OF THE RBI DIVISION OF MESTEK, INC. NEITHER THE PRINT NOR THE INFORMATION THEREON MAY BE REPRODUCED OR USED IN ANY MANNER WHATSOEVER OR DIVULGED TO ANY OTHER PERSON UNLESS SPECIFICALLY AUTHORIZED BY MESTEK, INC.		CHECKED BY JAS	DATE 10-15-15	DRAWING NUMBER CK3000N-0-R-8-S-0-C-A-00-E2			
		APPROVED BY	DATE	SHEET 3 OF 7	SHEET SIZE B	SCALE N/A	REVISION N/A

REVISIONS					
REV.	EN NO.	DATE	DESCRIPTION	DRAWN BY	APPROVED

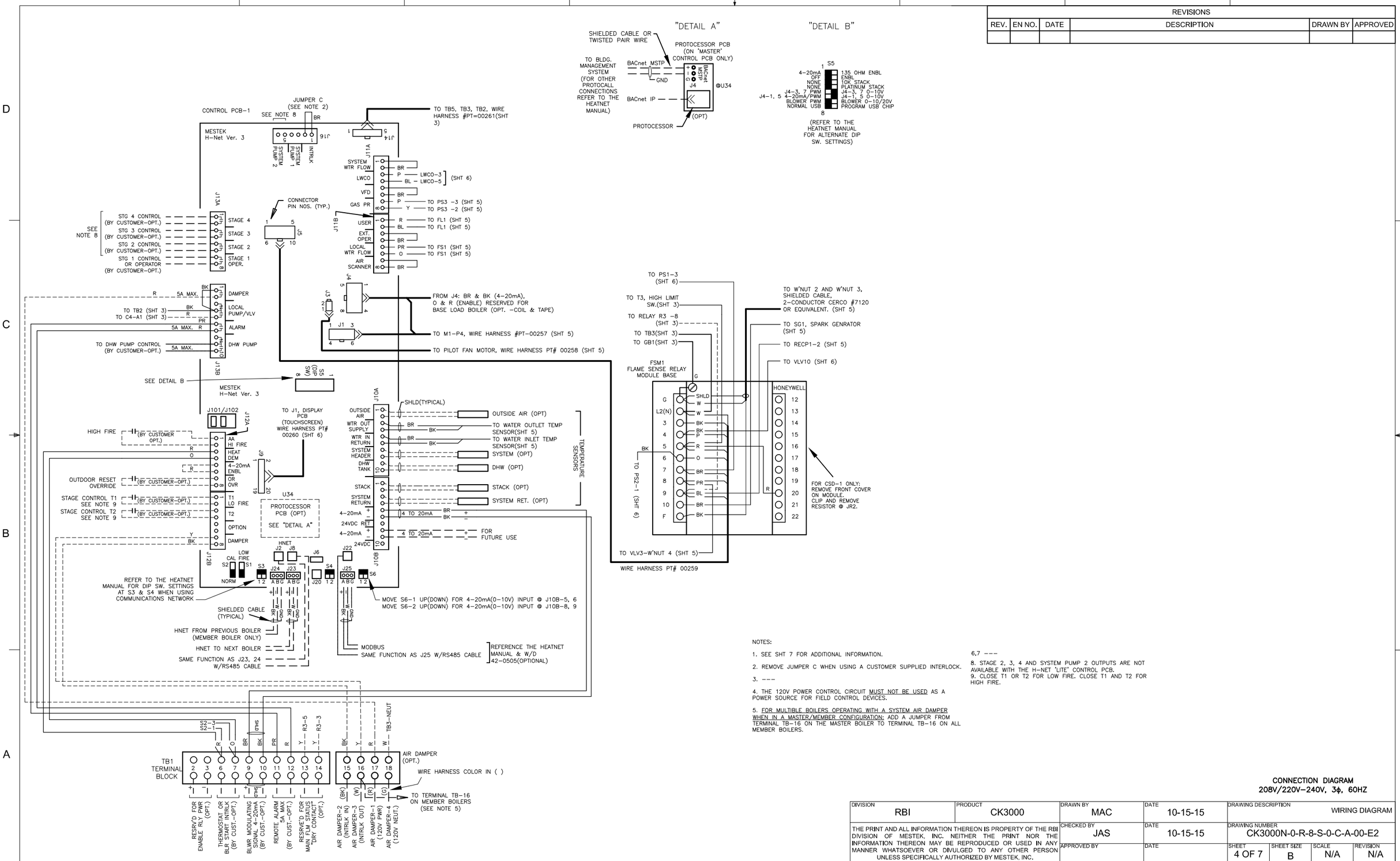

NOTES:

1. SEE SHT 7 FOR ADDITIONAL INFORMATION.
2. REMOVE JUMPER C WHEN USING A CUSTOMER SUPPLIED INTERLOCK.
3. ---
4. THE 120V POWER CONTROL CIRCUIT MUST NOT BE USED AS A POWER SOURCE FOR FIELD CONTROL DEVICES.
5. FOR MULTIBLE BOILERS OPERATING WITH A SYSTEM AIR DAMPER WHEN IN A MASTER/MEMBER CONFIGURATION: ADD A JUMPER FROM TERMINAL TB-16 ON THE MASTER BOILER TO TERMINAL TB-16 ON ALL MEMBER BOILERS.
6,7 ---
8. STAGE 2, 3, 4 AND SYSTEM PUMP 2 OUTPUTS ARE NOT AVAILABLE WITH THE H-NET 'LITE' CONTROL PCB.
9. CLOSE T1 OR T2 FOR LOW FIRE. CLOSE T1 AND T2 FOR HIGH FIRE.

CONNECTION DIAGRAM
208V/220V-240V, 3ϕ, 60HZ

DIVISION	PRODUCT	DRAWN BY	DATE	DRAWING DESCRIPTION			
RBI	CK3000	MAC	10-15-15	WIRING DIAGRAM			
THE PRINT AND ALL INFORMATION THEREON IS PROPERTY OF THE RBI DIVISION OF MESTEK, INC. NEITHER THE PRINT NOR THE INFORMATION THEREON MAY BE REPRODUCED OR USED IN ANY MANNER WHATSOEVER OR DIVULGED TO ANY OTHER PERSON UNLESS SPECIFICALLY AUTHORIZED BY MESTEK, INC.		CHECKED BY JAS	DATE 10-15-15	DRAWING NUMBER CK3000N-0-R-8-S-0-C-A-00-E2			
		APPROVED BY	DATE	SHEET 4 OF 7	SHEET SIZE B	SCALE N/A	REVISION N/A

REVISIONS					
REV.	EN NO.	DATE	DESCRIPTION	DRAWN BY	APPROVED

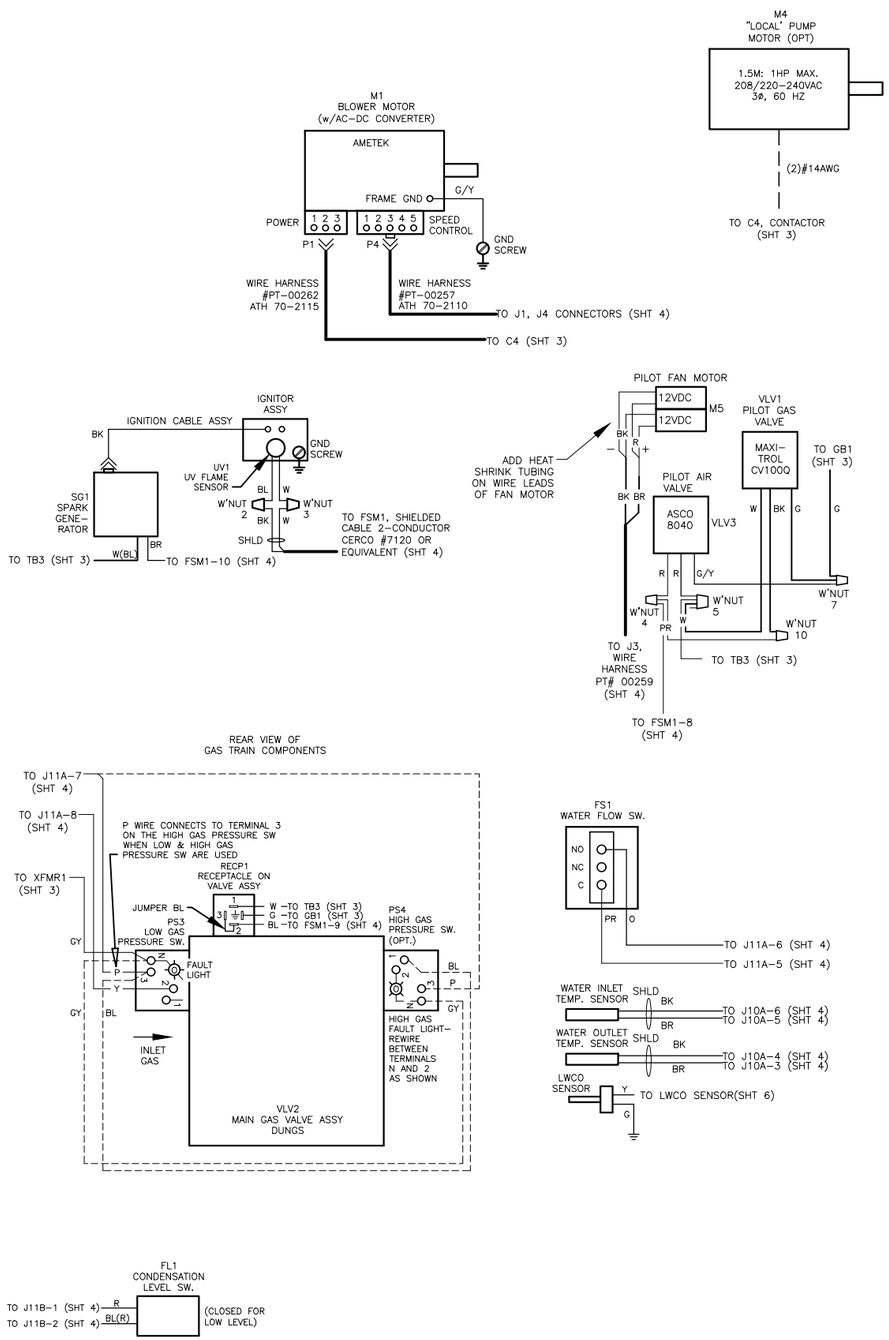

CONNECTION DIAGRAM
208V/220V-240V 3ϕ. 60HZ, 4 WIRE

DIVISION	PRODUCT	DRAWN BY	DATE	DRAWING DESCRIPTION			
RBI	CK3000	MAC	10-15-15	WIRING DIAGRAM			
THE PRINT AND ALL INFORMATION THEREON IS PROPERTY OF THE RBI DIVISION OF MESTEK, INC. NEITHER THE PRINT NOR THE INFORMATION THEREON MAY BE REPRODUCED OR USED IN ANY MANNER WHATSOEVER OR DIVULGED TO ANY OTHER PERSON UNLESS SPECIFICALLY AUTHORIZED BY MESTEK, INC.		CHECKED BY JAS	DATE 10-15-15	DRAWING NUMBER CK3000N-0-R-8-S-0-C-A-00-E2			
		APPROVED BY	DATE	SHEET 5 OF 7	SHEET SIZE B	SCALE N/A	REVISION N/A

REVISIONS					
REV.	EN NO.	DATE	DESCRIPTION	DRAWN BY	APPROVED

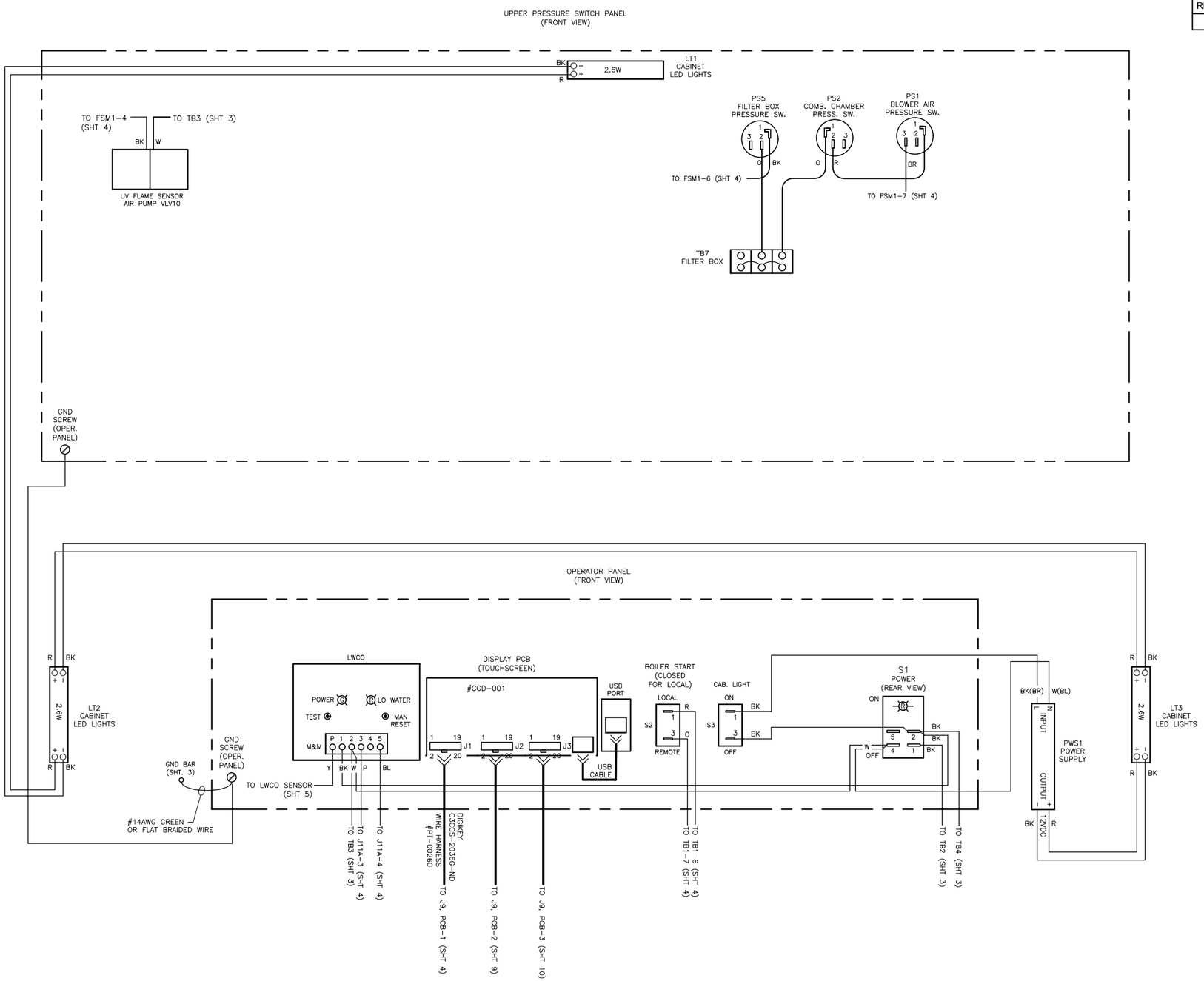

NOTES:

1. SEE SHT 7 FOR ADDITIONAL INFORMATION
2, 3 ---
4. THE 120VAC POWER CONTROL CIRCUIT MUST NOT BE USED AS A POWER SOURCE FOR FIELD CONTROL DEVICES.

CONNECTION DIAGRAM
208V/220V-240V 3ϕ. 60HZ

DIVISION	PRODUCT	DRAWN BY	DATE	DRAWING DESCRIPTION			
RBI	CK3000	MAC	10-15-15	WIRING DIAGRAM			
THE PRINT AND ALL INFORMATION THEREON IS PROPERTY OF THE RBI DIVISION OF MESTEK, INC. NEITHER THE PRINT NOR THE INFORMATION THEREON MAY BE REPRODUCED OR USED IN ANY MANNER WHATSOEVER OR DIVULGED TO ANY OTHER PERSON UNLESS SPECIFICALLY AUTHORIZED BY MESTEK, INC.		CHECKED BY JAS	DATE 10-15-15	DRAWING NUMBER CK3000N-0-R-8-S-0-C-A-00-E2			
		APPROVED BY	DATE	SHEET 6 OF 7	SHEET SIZE B	SCALE N/A	REVISION N/A

REVISIONS					
REV.	EN NO.	DATE	DESCRIPTION	DRAWN BY	APPROVED

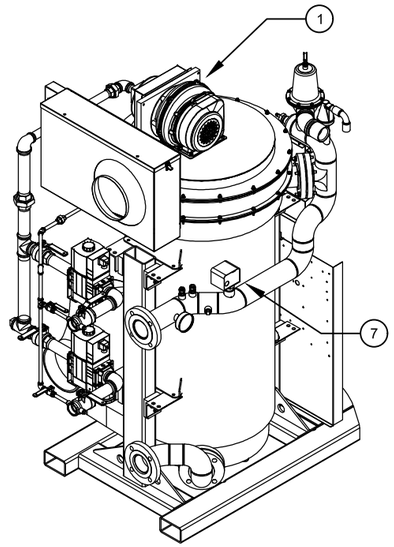

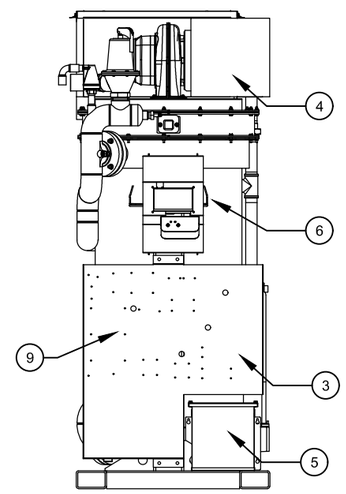

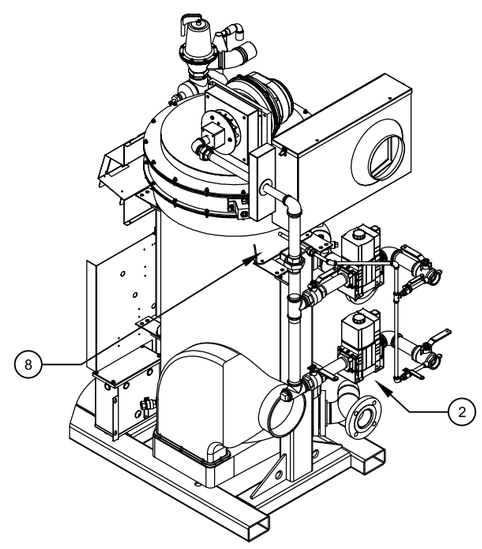

1. BLOWER MOTOR (M1)
2. MAIN GAS VALVE ASSEMBLY (VLV2)
3. MAIN ELECTRICAL CONTROL PANEL
4. UPPER PRESSURE SWITCH PANEL
5. TRANSFORMER (FOR 460V AND 575V UNITS ONLY)
6. OPERATOR PANEL
7. FLOW SWITCH (FS1)
8. SPARK GENERATOR (SG1) AND IGNITOR ASSEMBLY)
9. H-NET CONTROL BOARD

NOTES:

1. WIRE COLOR CODE SHALL BE AS FOLLOWS:

BK-BLACK	R-RED	BL-BLUE	G-GREEN
W-WHITE	P-PINK	BR-BROWN	GY-GRAY
PR-PURPLE	Y-YELLOW	O-ORANGE	

WIRE CODE: ———— FACTORY WIRING
— — — — FIELD WIRING
- - - - - - - OPTIONAL WIRING

ALL WIRES SHALL BE #18AWG UNLESS SPECIFIED. WIRE TYPE SHALL BE TEW, 600V, STRANDED 16x30, WITH INSULATION RATED FOR 105° OR EQUIVALENT.

USE CABLE TIES, CABLE FASTENERS, SPADE TERMINALS, MALE CONNECTORS, WIRENUTS, ETC. AS REQUIRED.

2. LINE VOLTAGE WIRE AND LOW VOLTAGE WIRE SHALL BE KEPT SEPARATE AS MUCH AS POSSIBLE
3. LINE VOLTAGE SHALL NEVER RUN PARALLEL TO LOW VOLTAGE OR THROUGH THE SAME KNOCKOUT. IF LOW VOLTAGE AND LINE VOLTAGE MUST PASS EACH OTHER THEY SHALL PASS PERPENDICULAR TO EACH OTHER.
4. DO NOT RUN ANY SIGNAL CABLE NEAR SPARK GENERATOR.

ABBREVIATION:

C# – CONTACTOR 1,2,3 (C1, C2, ...)
DHW – DOMESTIC HOT WATER
F# – FUSE 1,2,3 (F1, F2, ...)
FL# – FLOAT SWITCH 1,2,3 (FL1, FL2, ...)
FLA – FULL LOAD AMPS
FS# – FLOW SWITCH 1,2,3 (FS1, FS2, ...)
FSM# – FLAME SENSE RELAY MODULE 1,2,3 (FSM1, FSM2, ...)
GB# – GROUND BAR 1,2,3 (GB1, GB2, ...)
IGN# – IGNITOR 1,2,3 (IGN1, IGN2, ...)
LT# – LIGHT 1,2,3 (LT1, LT2, ...)
LWCO – LOW WATER CUTOFF
OPT – OPTION
OL – OVERLOAD
M# – MOTOR 1,2,3 (M1, M2, ...)
PS# – PRESSURE SWITCH 1,2,3 (PS1, PS2, ...)
PWS# – POWER SUPPLY
S# – SWITCH 1,2,3 (S1, S2, ...)
SCCR – SHORT CIRCUIT CURRENT RATING
SG# – SPARK GENERATOR 1,2,3 (SG1, SG2, ...)
SHLD – SHIELDED CABLE
SS RELAY – SOLID STATE RELAY
TB# – TERMINAL BLOCK 1,2,3 (TB1, TB2, ...)
VLV# – VALVE 1,2,3 (VLV1, VLV2, ...)
XFMR# – TRANSFORMER 1,2,3 (XFMR1, XFMR2, ...)

INFORMATION AND LAYOUT DIAGRAM

DIVISION	PRODUCT	DRAWN BY	DATE	DRAWING DESCRIPTION			
RBI	CK3000	MAC	10-15-15	WIRING DIAGRAM			
THE PRINT AND ALL INFORMATION THEREON IS PROPERTY OF THE RBI DIVISION OF MESTEK, INC. NEITHER THE PRINT NOR THE INFORMATION THEREON MAY BE REPRODUCED OR USED IN ANY MANNER WHATSOEVER OR DIVULGED TO ANY OTHER PERSON UNLESS SPECIFICALLY AUTHORIZED BY MESTEK, INC.		CHECKED BY JAS	DATE 10-15-15	DRAWING NUMBER CK3000N-0-R-8-S-0-C-A-00-E2			
		APPROVED BY	DATE	SHEET 7 OF 7	SHEET SIZE B	SCALE N/A	REVISION N/A