CODE OPTIONS

CSD-1	STANDARD

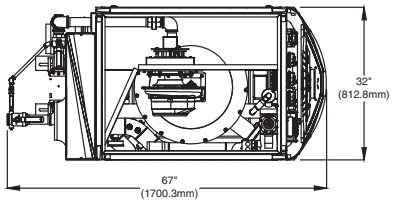

TOP

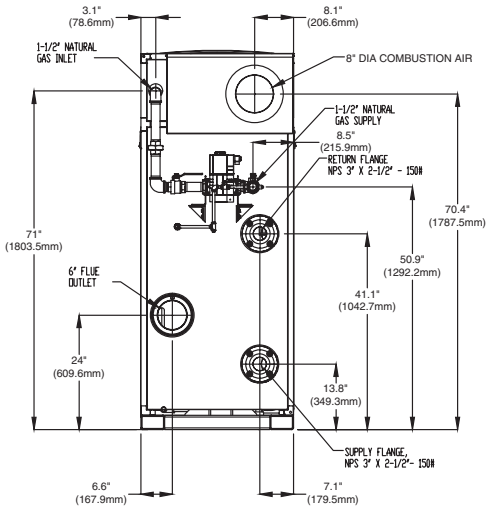

BACK

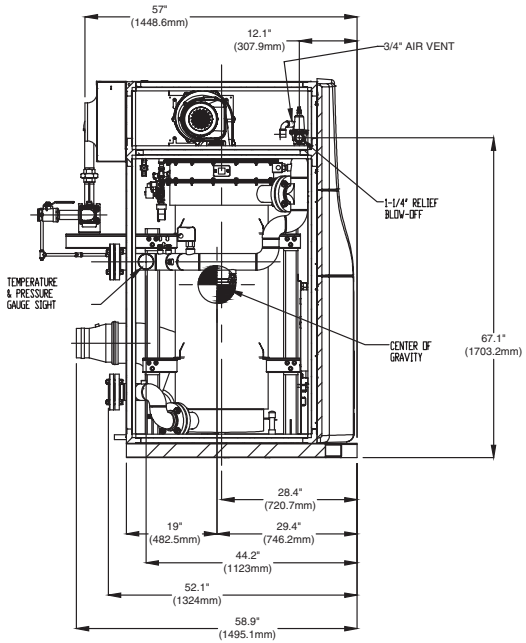

LEFT SIDE

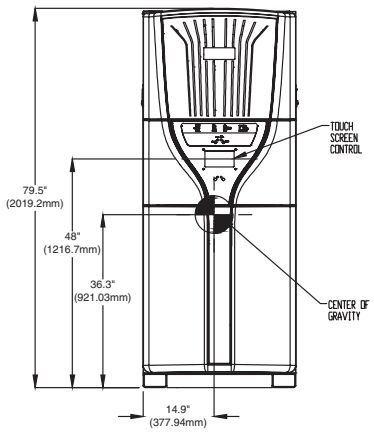

FRONT

Notes:
1. Dimensions are approximate and should not be used to "rough-in" equipment.
2. Dimensions are subject to change without notice.

BOILER CERTIFIED RATINGS & CAPACITIES

Fuel Type	Natural Gas	**Boiler FLA**	12.0.*
Input BTU/hr.	1,500,000 / 440 KW	**Boiler HP**	42.6
Output BTU/hr.	1,426,500 / 418 KW	**Min. Gas Pressure Required**	3" W.C.
Electrical Requirements	208/230 VAC 60 hz/1PH	**Max. Gas Pressure Allowed**	14" W.C.
	(with neutral)	**Operating Weight**	1500 lbs. / 680 kg.

BOILER TRIM & CONTROLS

Main Gas Valve	Dungs MBC	**Air Switch**	Huba
Firing Valve	1 1/2" Apollo	**Flow Switch**	TACO
Ignition Control	Honeywell RM7895C	**Blocked Flue Switch**	Cleveland NS2
Operating Control	HeatNet®	**Blower Motor**	Ametek
High Limit	Honeywell L4006E	**L.W.C.O.**	750P-MT-120
Main Ball Valve	1 1/2" Apollo	**Relief Valve**	1-1/4" x 1-1/4" set @ 50 psi
Pilot Cock	1/4"	**Pilot Regulator**	CV100

A.S.M.E.

ASME Sect IV Fire Side Htg Surface	124 Sq. Ft. / 11.5 Sq. M.	**Design Data**	Max. 160 psig & 210°F
		Water Volume	40 gal. / 151 Liters
ASME Sect IV Water Side Htg Surface	132 Sq. Ft. / 12.3 Sq. M.		
CV. GPM (1PSID)	85		

* Add circulator amps.

BOILER TEMPERATURE RISE / PRESSURE DROP (Based on Full Input)

20°F / 11.1°C				40°F / 22.2°C				60°F / 33.3°C				80°F / 44.4°C				100°F / 55.5°C			
Flow Rate		Pressure Drop		Flow Rate		Pressure Drop		Flow Rate		Pressure Drop		Flow Rate		Pressure Drop		Flow Rate		Pressure Drop	
GPM	L/s	Ft	kPa	GPM	L/s	Ft	kPa	GPM	L/s	Ft	kPa	GPM	L/s	Ft	kPa	GPM	L/s	Ft	kPa
142.7	9.0	6.5	19.4	71.4	4.5	1.6	4.8	47.6	3.0	.7	2.1	35.7	2.2	.4	1.2	28.5	1.8	.3	.8

Flow GPM		Temp. Rise** (°F)		Vent Length (Equiv. Ft.)		Air Inlet Length (Equiv. Ft.)	
Min	Max	Min	Max	Min	Max	Min	Max
28.5	142.7	20	100	6	100	0	100

** Min/Max delta t reflects boiler operation at full input. For applications requiring operation above/below these parameters please consult factory.

REP FIRM _____
SUBMITTED BY _____
JOB NAME _____
ARCHITECT _____
ENGINEER _____
CONTRACTOR _____
DATE _____

FlexCore 1500

Category II or Category IV Appliance
(see Installation and Operation Manual for venting information)

RBI®
A Division of Mestek, Inc.
Westfield, MA 01085
(413) 568-9571