Submittal Data Sheet

Wilo NL – Base Mounted End Suction Pumps

NL 6 x 5 x 16

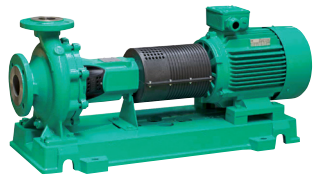

Project:	
Engineer:	
Contractor:	
Submitted By:	Date:
Approved By:	Date:

Tag #	Model #	Flow (USGPM)	Head (Feet)	HP	Enclosure TEFC/ODP	Frame	Cycle	Phase	Voltage	RPM
	NL 6 x 5 x 16						60Hz	3		1750

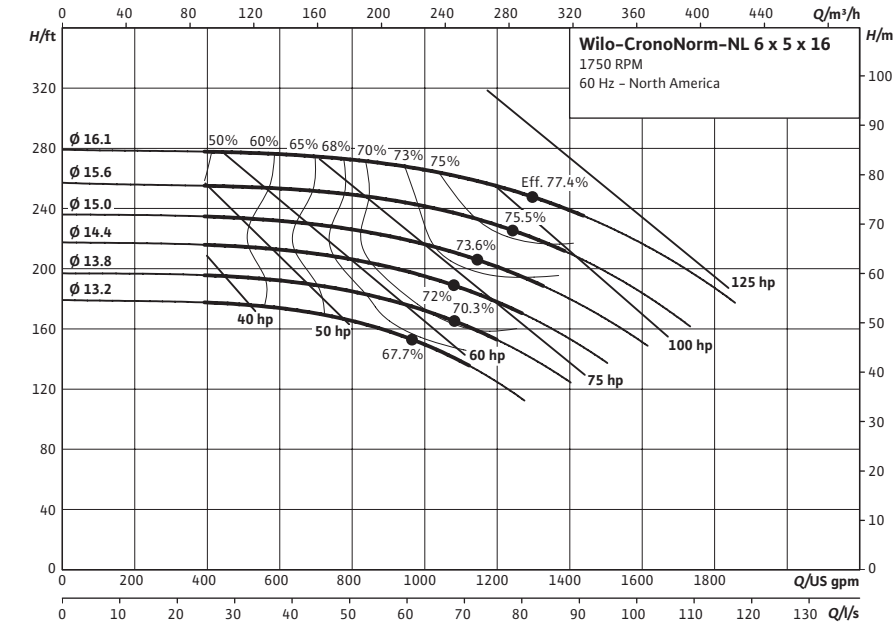

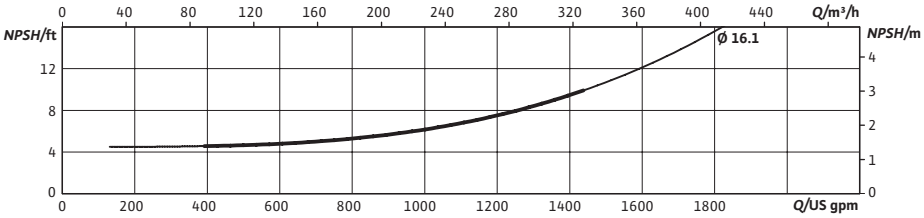

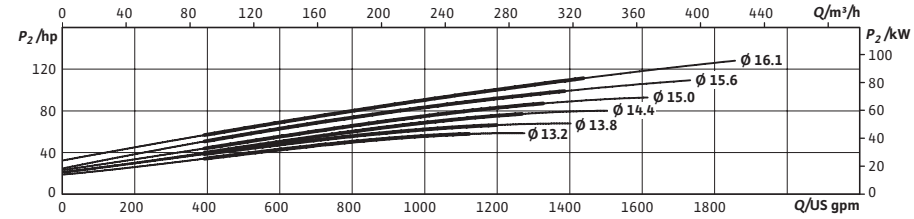

Technical Data

Approved Fluids
Heating Water
Cooling and cold water
Water-Glycol mixtures (for 20-40% glycol and fluid temp ≤ 104°F (40°C)

Fluid Temperature	
Mechanical Seal	18°F to 250°F (-8°C to 120°C)
Stuffing Box Packing	32°F to 220°F (0°C to 105°C)

Materials of Construction

☐	Pump Housing	C.I. FG260
☐	Impeller	Bronze LG2
☐	Impeller (optional)	C.I. FG260
☐	Pump Shaft	SS AISI 420
☐	Mechanical Seal	Carbon/silicon carbide/ EPDM (E1)
☐	Other Mechanical Seals	Avail. on request
☐	Additional Spacer Coupling	Avail. on request
☐	Other:	

Approval Stamp

Email Print Save

Submittal Data Sheet

Wilo NL – Base Mounted End Suction Pumps

Dimensions & Weights

Wilo NL

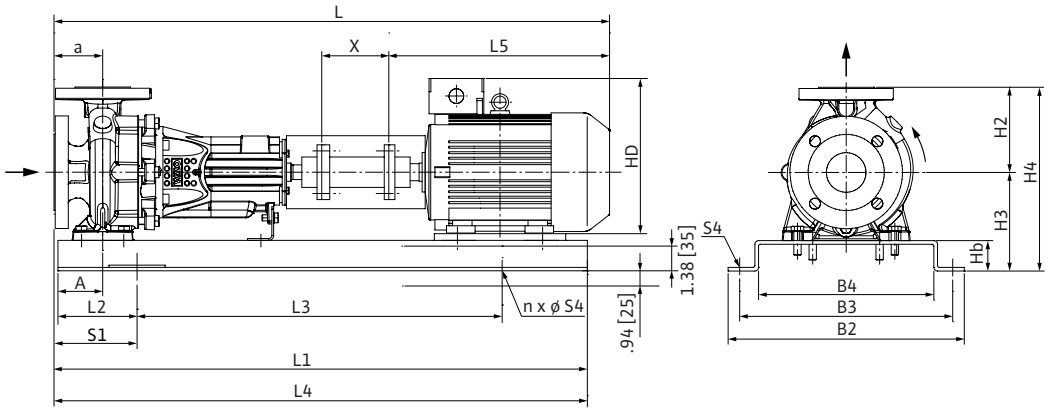

NL 6 x 5 x 16

Dimensions – Inches (mm)

Frame	a	A	L	L1	L2	L3	L4	L5	X	HD	H2	H3	H4	Hb	B2	B3	B4	n	S1	S4
324T	5.50 (140)	4.56 (116)	56.31 (1430)	55.88 (1419)	9.81 (249)	36.25 (921)	56.88 (1445)	29.44 (748)	.5 (13)	15.63 (397)	15.75 (400)	16.69 (424)	32.44 (824)	4.25 (108)	22.06 (560)	20.63 (524)	17.56 (446)	4	10.81 (275)	.63 (16)
326T	5.50 (140)	4.56 (116)	56.31 (1430)	55.88 (1419)	9.81 (249)	36.25 (921)	56.88 (1445)	29.44 (748)	.5 (13)	15.63 (397)	15.75 (400)	16.69 (424)	32.44 (824)	4.25 (108)	22.06 (560)	20.63 (524)	17.56 (446)	4	10.81 (275)	.63 (16)
364T	5.50 (140)	4.56 (116)	60.63 (1540)	55.88 (1419)	9.81 (249)	36.25 (921)	56.88 (1445)	33.75 (857)	.5 (13)	21.75 (552)	15.75 (400)	16.69 (424)	32.44 (824)	4.25 (108)	22.06 (560)	20.63 (524)	17.56 (446)	4	10.81 (275)	.63 (16)
365T	5.50 (140)	4.56 (116)	60.63 (1540)	55.88 (1419)	9.81 (249)	36.25 (921)	56.88 (1445)	33.75 (857)	.5 (13)	21.75 (552)	15.75 (400)	16.69 (424)	32.44 (824)	4.25 (108)	22.06 (560)	20.63 (524)	17.56 (446)	4	10.81 (275)	.63 (16)
364TS	5.50 (140)	4.56 (116)	55.44 (1408)	55.88 (1419)	9.81 (249)	36.25 (921)	56.88 (1445)	28.56 (725)	.5 (13)	16.56 (421)	15.75 (400)	16.69 (424)	32.44 (824)	4.25 (108)	22.06 (560)	20.63 (524)	17.56 (446)	4	10.81 (275)	.63 (16)
365TS	5.50 (140)	4.56 (116)	55.44 (1408)	55.88 (1419)	9.81 (249)	36.25 (921)	56.88 (1445)	28.56 (725)	.5 (13)	16.56 (421)	15.75 (400)	16.69 (424)	32.44 (824)	4.25 (108)	22.06 (560)	20.63 (524)	17.56 (446)	4	10.81 (275)	.63 (16)
404T	5.50 (140)	4.56 (116)	64.88 (1648)	55.88 (1419)	9.81 (249)	36.25 (921)	56.88 (1445)	38.00 (965)	.5 (13)	22.94 (583)	15.75 (400)	16.69 (424)	32.44 (824)	4.25 (108)	22.06 (560)	20.63 (524)	17.56 (446)	4	10.81 (275)	.63 (16)
405TS	5.50 (140)	4.56 (116)	61.13 (1553)	64.94 (1649(	11.81 (300)	41.38 (1051)	65.94 (1675)	34.25 (870)	.5 (13)	18.44 (468)	15.75 (400)	16.69 (424)	32.44 (824)	4.25 (108)	22.06 (560)	20.63 (524)	17.56 (446)	4	10.81 (275)	.63 (16)
444TS	5.50 (140)	4.56 (116)	67.38 (1709)	64.94 (1649(	11.81 (300)	41.38 (1051)	65.94 (1675)	40.50 (1029)	.5 (13)	25.50 (648)	15.75 (400)	16.69 (424)	32.44 (824)	4.25 (108)	24.44 (621)	23.00 (584)	21.25 (540)	4	12.75 (324)	.63 (16)
445TS	5.50 (140)	4.56 (116)	67.38 (1709)	64.94 (1649(	11.81 (300)	41.38 (1051)	65.94 (1675)	40.50 (1029)	.5 (13)	25.50 (648)	15.75 (400)	16.69 (424)	32.44 (824)	4.25 (108)	24.44 (621)	23.00 (584)	21.25 (540)	4	12.75 (324)	.63 (16)

Flange Dimensions – Suction Side

Dimensions – Inches (mm)

DN S #125	ØD	Ød	Øk	b	n	D2
6	**11.00 (279)**	**8.50 (516)**	**9.50 (241)**	**1.00 (25)**	**8**	**.88 (22)**

Flange Dimensions – Discharge Side

Dimensions – Inches (mm)

DN D 125#	ØD	Ød	Øk	b	n	D2
5	**10.00 (254)**	**7.31 (186)**	**8.50 (216)**	**.94 (24)**	**8**	**.88 (22)**

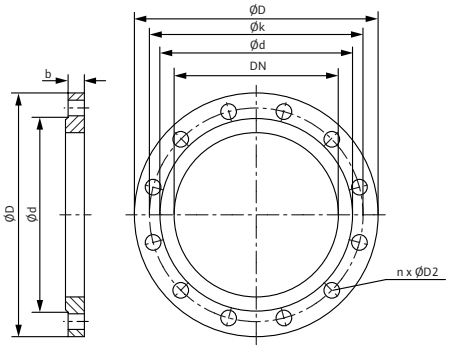

WILO USA LLC

Tel: (866) 945-6872 Web: www.wilo-usa.com
Fax: (708) 338-9455 Email: info@wilo-usa.com

WILO Canada Inc.

Tel: (866) 945-6236 Web: www.wilo-canada.com
Fax: (403) 277-9456 Email: info@wilo-canada.com

WILO Mexico

Tel: +52 55 5586 3209 Web: www.wilo-mexico.com.mx
Fax: +52 1 55 5413 4165 Email: info@wilo.com.mx